ROSCOMMON EQUIPMENT CENTER

Northeast Forest Fire Supervisors in cooperation with Michigan's Forest Fire Experiment Station

P.O. Box 68, Roscommon, MI 48653

July 1993

PROJECT 44 - Michigan Large Skidder[1]

Specially modified skidders have been used successfully in forest fire for twenty five years. The Roscommon Equipment Center published an Equipment Evaluation Report in 1979 entitled *Skidders in Forest Fire Control*. This report discusses the use of skidders with water tanks and pumping units, as well as with fireline plows. It also lists the advantages and disadvantages of using these specialized vehicles for this use.

Noted for their power and excellent cross-country mobility, two types of skidder tank systems have been designed for forest fire control. This project record shows sketches of the tank utilized by the Michigan Department of Natural Resources on John Deere 540 series skidders. A variation of this tank has been used on skidders made by other manufacturers.

Others have used temporary or portable tank systems for use with these vehicles. Generally, portable tanks are designed to be winched up into a logging arch area or, in the case of a grapple skidder, lifted in place by the grapple. REC Project 26, *Portable Fire Fighting Unit for Skidders*, provides details of Maine's portable tank system. This project report is available from the address above.

Information contained in this report has been developed for the guidance of employees of the member States, Provinces and Federal Agencies.

The Use of trade, firm or corporation names is for the information and convenience of the user. Such use does not constitute an official evaluation, conclusion, recommendation, endorsement, or approval of any product or service to the exclusion of others which may be suitable.

[1] This project bulletin contains information that may change regularly. Its contents may include preliminary drawings or manufacturer's product data that may have changed. It is intended primarily for conceptual use. Additional or updated information may be available by contacting the address above.

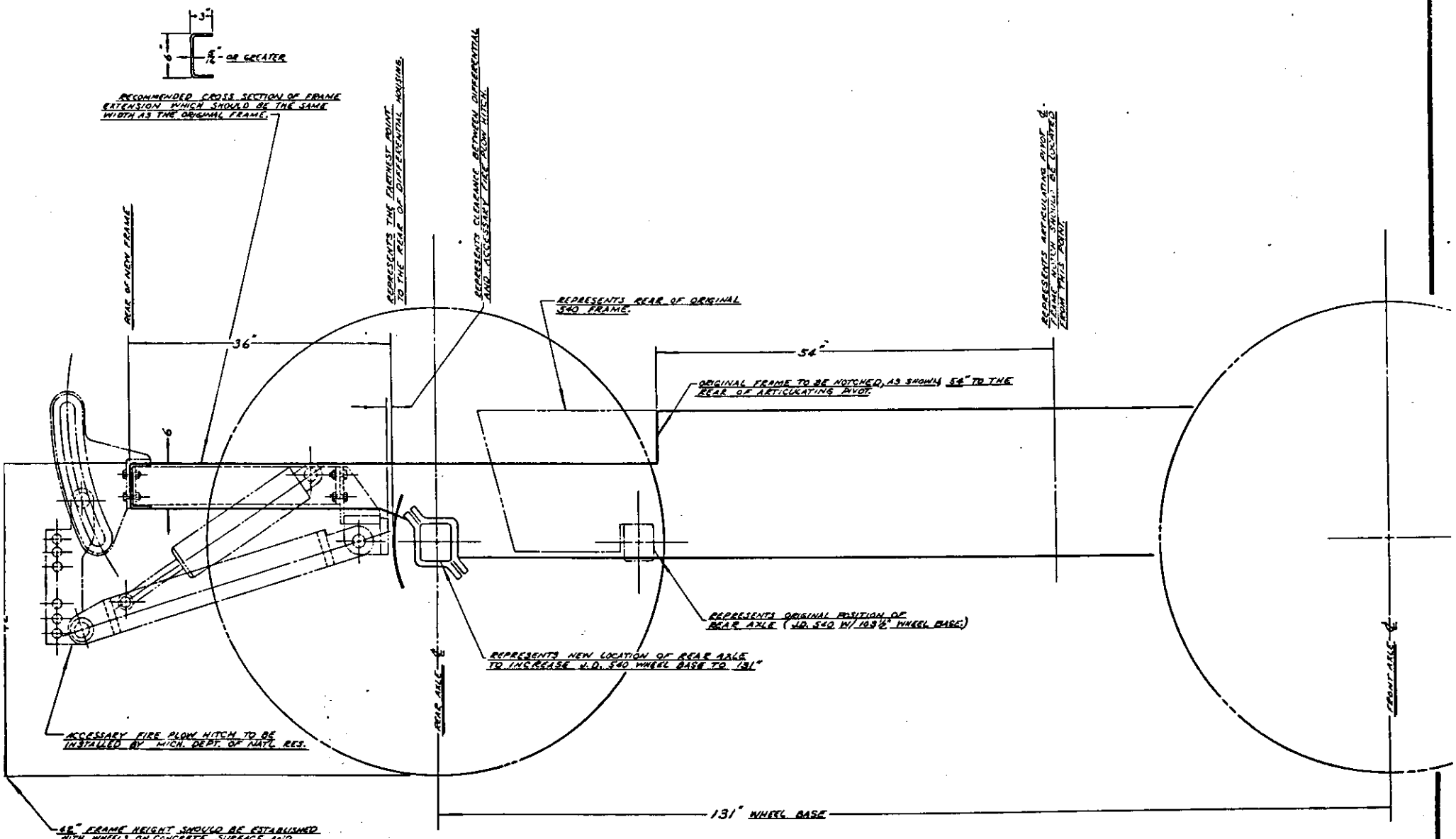

JOHN DEERE 540 FRAME ALTERATIONS

PURPOSE OF THIS DRAWING IS TO CONTROL A FEW KEY DIMENSIONS, MAINLY TO INSURE EASY ATTACHMENT OF FIRE PLOW HITCH AND TO ESTABLISH 131" WHEEL BASE.
NO ATTEMPT, IMPLIED OR OTHERWISE IS MADE TO CONTROL STRENGTH, QUALITY, OR RELIABILITY OF FRAME ALTERATION, AND THIS DRAWING SHOULD NOT BE INTERPRETED AS GUARANTEEING THAT RELIABILITY.

MICHIGAN FOREST FIRE EXPERIMENT STATION
MICHIGAN DEPARTMENT OF NATURAL RESOURCES

DESIGNED BY-	TRACED BY-
DRAWN BY-	CHECKED BY-
DATE- 5-69	APPROVED BY-
SCALE- 1" = 6"	

0-362 A

MICHIGAN FOREST FIRE EXPERIMENT STATION
ROSCOMMON EQUIPMENT CENTER PROJECT

500 GAL. TANK FOR JOHN DEERE 540 SKIDDER

SCALE: 1/4" = 6"
DESIGNED BY: MUX BRADLEY
DRAWN BY: Troy A. Lindsay
TRACED BY:
DATE 5-69
CHECKED BY:
APPROVED BY:
REVISED:
DATE 7.92
PROJECT NO. 44

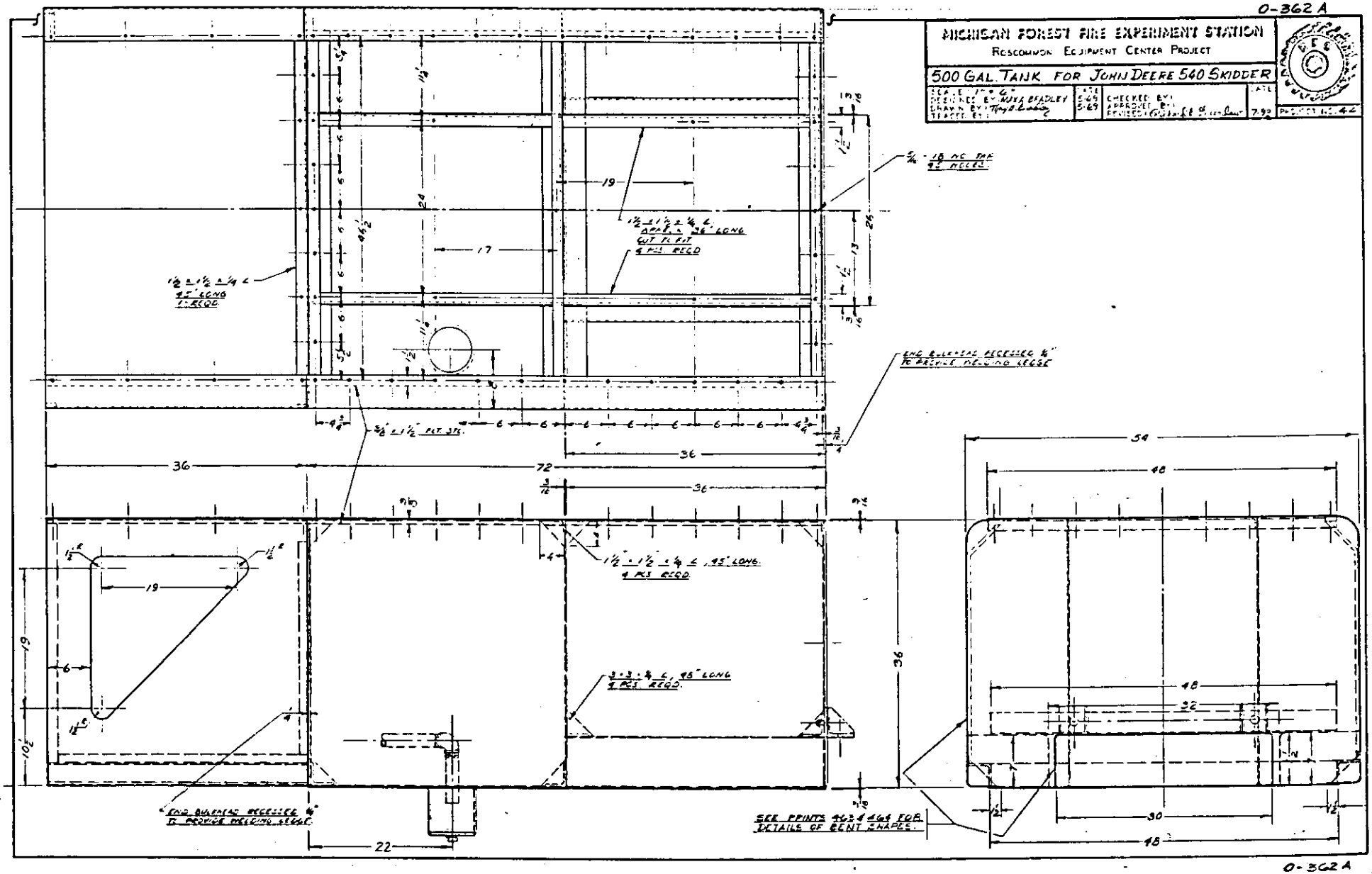

0-362 A

0-364

MICHIGAN FOREST FIRE EXPERIMENT STATION	
MICHIGAN DEPARTMENT OF NATURAL RESOURCES	
DESIGNED BY - BRADLEY	CHECKED BY -
DRAWN BY - Maud A Bradley	APPROVED BY -
DATE 4-69	SCALE 1/4

DET.	REQD.	TITLE	PRINT
1	1	ANCHOR BRACKET	0-365
2	8	1/2 - 2 1/2 N.C. HEX. HD. BOLT W/N & L.W	PUR.
3	1	PIN - HYD. CYL. 1 1/2" DIA.	0-366
4	2	1/4" - 2 1/2" COTTER KEY	PUR.
5	2	CHANNEL IRON SUPPORT - 1-RIGHT & 1-LEFT	0-364
6	1	3/8 - 90° ST EL - EXT STRONG	PUR.
7	2	1/2 - 2" N.C. HEX HD. BOLT W/N & L.W.	PUR.
8	1	PARALLEL SLOT BRACKET	0-364
9	8	1/2 - 2 1/2" N.C. HEX HD. BOLT W/N & L.W	PUR.
10	1	DRAWBAR	0-364
11	1	NO 8 SWIVEL HOSE FITTING W/ 3/8 I.P.T. ADAPTOR	PUR.
12	1	SAME AS 11	PUR.
13	1	1/8 PIPE - 45° GREASE FITTING	PUR.
14	2	ROLLER	0-365
15	2	1/8 PIPE - STRAIGHT GREASE FITTING	PUR.
16	2	DRAWBAR PIN - 2" DIA - SHORT	0-365
17	1	DEPTH ADJUSTER BRACKET	0-365
18	4	3/8 - 3" SPLIT ROLL PIN	PUR.
19	2	1/4 - 2 1/2" COTTER KEY	PUR.
20	1	PIN - HYD. CYL. 1 1/2" DIA.	0-366
21	1	DRAWBAR PIN - 2" DIA. - LONG	0-366
22	2	3/8 - 3" SPLIT ROLL PIN	PUR.

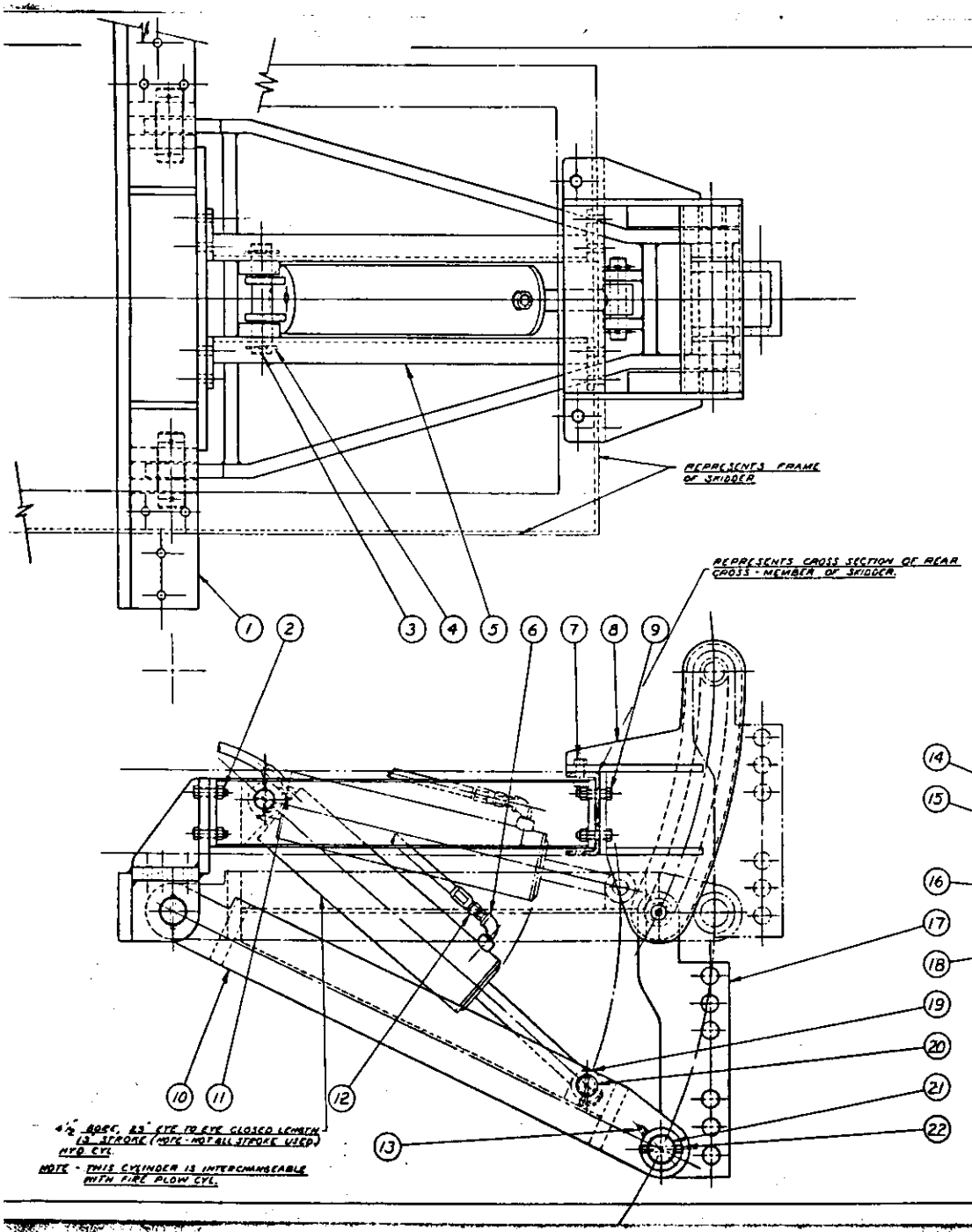

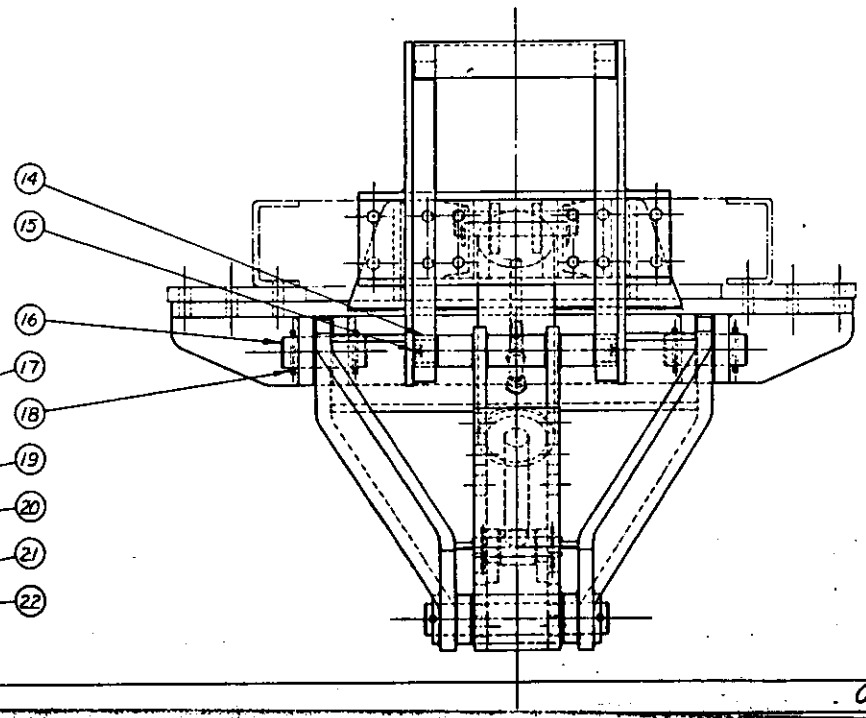

HYDRAULICALLY ADJUSTABLE HITCH (FLOATING) FOR MICHIGAN HYD. FIRE PLOW.

THIS HITCH WAS DESIGNED SPECIFICALLY FOR MULTI-JACK M-D. 170C D SKIDDER BUT IS INTENDED TO BE ADAPTABLE TO OTHER MAKES & MODELS.

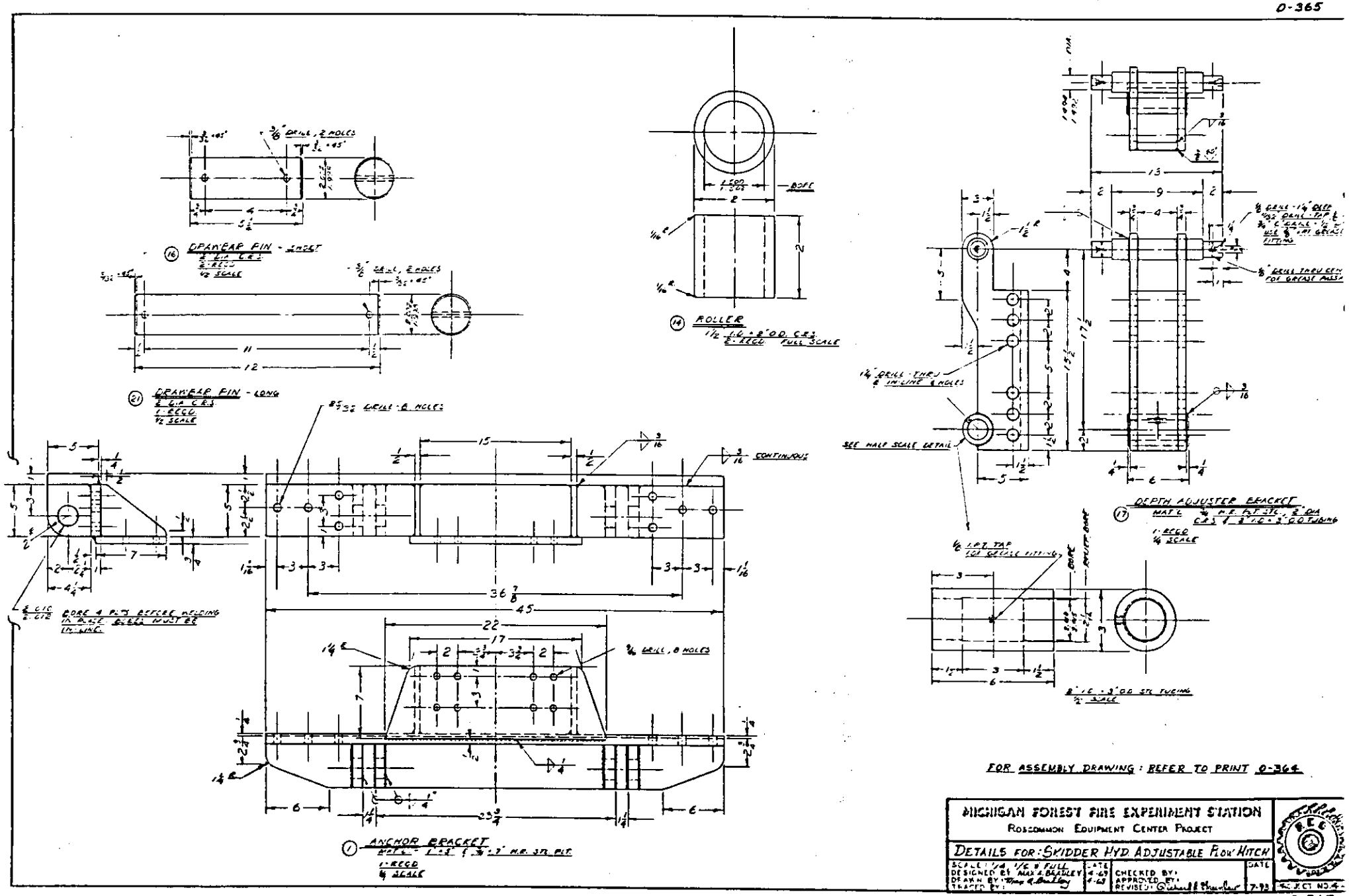
3/8" DRILL, 2 HOLES
(16) DRAWBAR PIN - SHORT
2 LG. C.R.S.
2-REQD
1/2 SCALE
3/8" DRILL, 2 HOLES
(21) DRAWBAR PIN - LONG
2 LG. C.R.S.
1-REQD
1/2 SCALE
BORE
(14) ROLLER
1 1/2 LG. x 2" O.D. C.R.S.
2-REQD FULL SCALE
13
9
4
1 1/4" DRILL THRU
8 IN LINE 8 HOLES
SEE HALF SCALE DETAIL
(17) DEPTH ADJUSTER BRACKET
MAT'L 3/4 M.R. PLT. 3" L. 2" DIA
CRS 1 3" L. 2" O.D. TUBING
1-REQD
1/4 SCALE
1/8 I.P.T. TAP
FOR GREASE FITTING
BORE
ROLLER BORE
2" L. 3" OD STD TUBING
1/2 SCALE
8 DIA
BORE 4 PLTS BEFORE WELDING
IN PLACE. BOLTS MUST BE
IN LINE.
DRILL 8 HOLES
CONTINUOUS
(1) ANCHOR BRACKET
MAT'L - 1 x 8 & 3/8" M.R. STL PLT
1-REQD
1/4 SCALE
FOR ASSEMBLY DRAWING: REFER TO PRINT 0-364
MICHIGAN FOREST FIRE EXPERIMENT STATION
ROSCOMMON EQUIPMENT CENTER PROJECT
DETAILS FOR: SKIDDER HYD ADJUSTABLE PLOW HITCH
SCALE: 1/4 1/2 & FULL
DESIGNED BY: MAX E. BRADLEY
DRAWN BY:
TRACED BY:
DATE
4-69
4-69
CHECKED BY:
APPROVED BY:
REVISED BY:
7-73
PROJECT NO. 4-
0-365

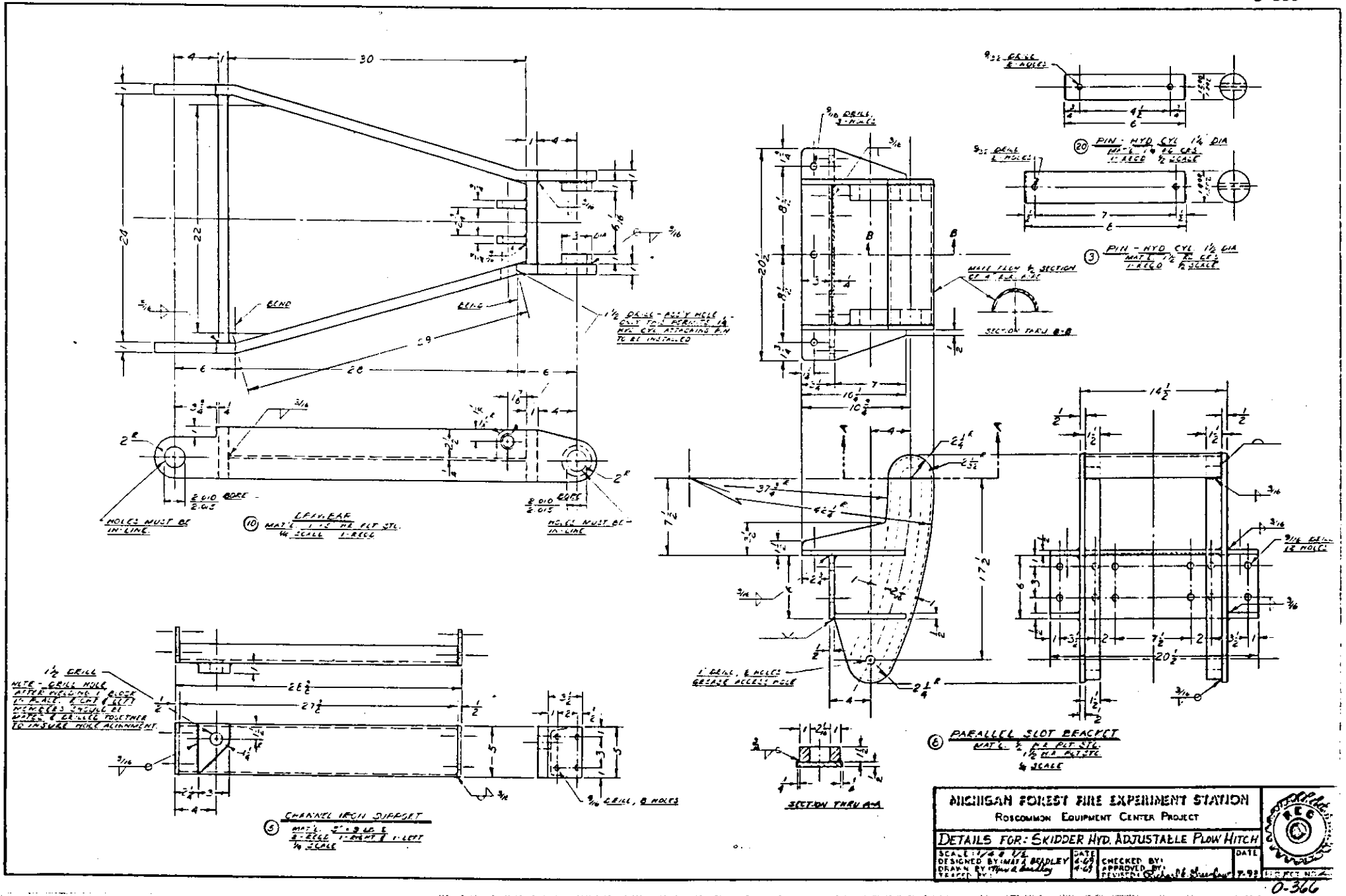
30
24
22
BEND
BEND
29
28
6
6
1½ DRILL - POSSIBLE HOLE ONLY TO BE PERMITTED IF HYD. CYL. ATTACHING PIN TO BE INSTALLED
HOLES MUST BE IN-LINE
HOLES MUST BE IN-LINE
2.010 BORE
2.015
2.015
2.010
(10) LEVELBAR
MAT'L 1-½ HR PLT STL.
1/4 SCALE 1-REQD
1½ DRILL
NOTE - DRILL HOLE AFTER WELDING 1 BLOCK TO PLATE. 1 CUT LEFT HOLES SHOULD BE DONE & DRILLED TOGETHER TO INSURE HOLE ALIGNMENT
(5) CHANNEL IRON SUPPORT
MAT'L 3" x 3 LB. C
2-REQD 1-RIGHT & 1-LEFT
1/4 SCALE
9/16 DRILL, 8 HOLES
9/16 DRILL, 1-HOLE
SECTION THRU A-A
SECTION THRU B-B
MAKE FROM ½ SECTION OF 4" B.A. PIPE
1" DRILL, 8 HOLES
GREASE ACCESS HOLE
(6) PARALLEL SLOT BRACKET
MAT'L ½ HR PLT STL.
1½ HR PLT STL
1/4 SCALE
9/32 DRILL 8-HOLES
(20) PIN - HYD CYL 1¼ DIA
MAT'L 1 ½ RC CRS
1-REQD ½ SCALE
9/32 DRILL 8-HOLES
(3) PIN - HYD CYL 1½ DIA
MAT'L 1½ RC CRS
1-REQD ½ SCALE
9/16 DRILL 18 HOLES
MICHIGAN FOREST FIRE EXPERIMENT STATION
ROSCOMMON EQUIPMENT CENTER PROJECT
DETAILS FOR: SKIDDER HYD. ADJUSTABLE PLOW HITCH
SCALE: 1/4 & 1/2
DESIGNED BY: MAX A. BEADLEY
DRAWN BY:
TRACED BY:
DATE 4-69
4-69
CHECKED BY:
APPROVED BY:
REVISED BY:
DATE 7-93
PROJECT NO. 0-366